3585P, 3565P FERROX PLUS
3615P 3595P INOX PLUS

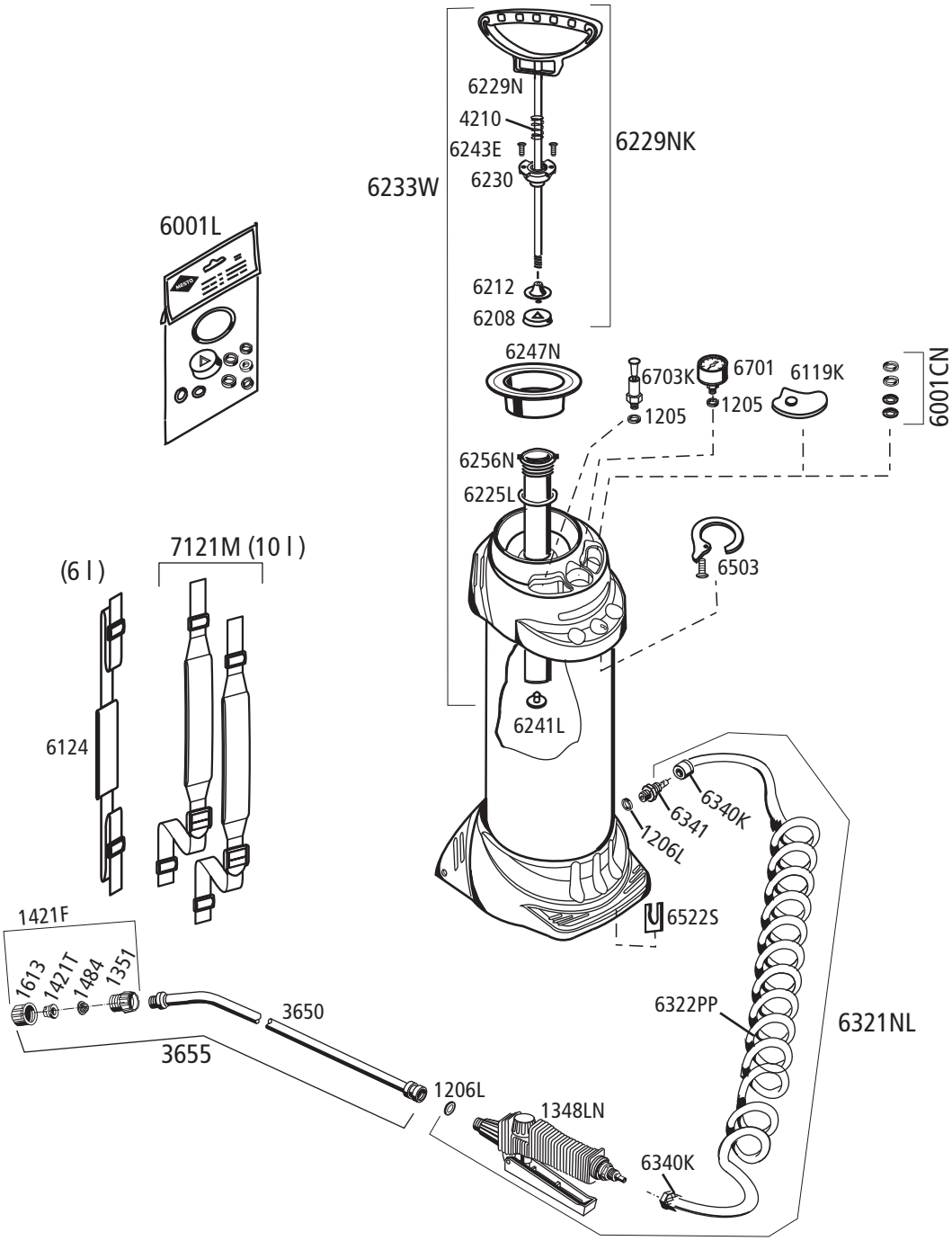

1117
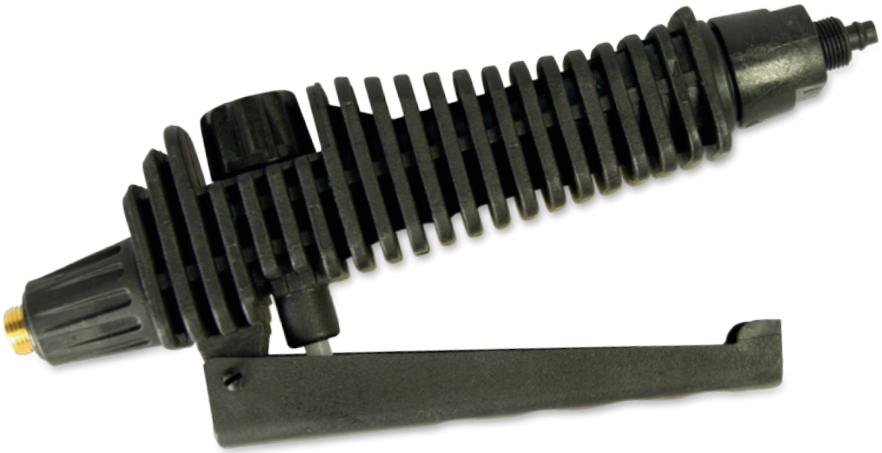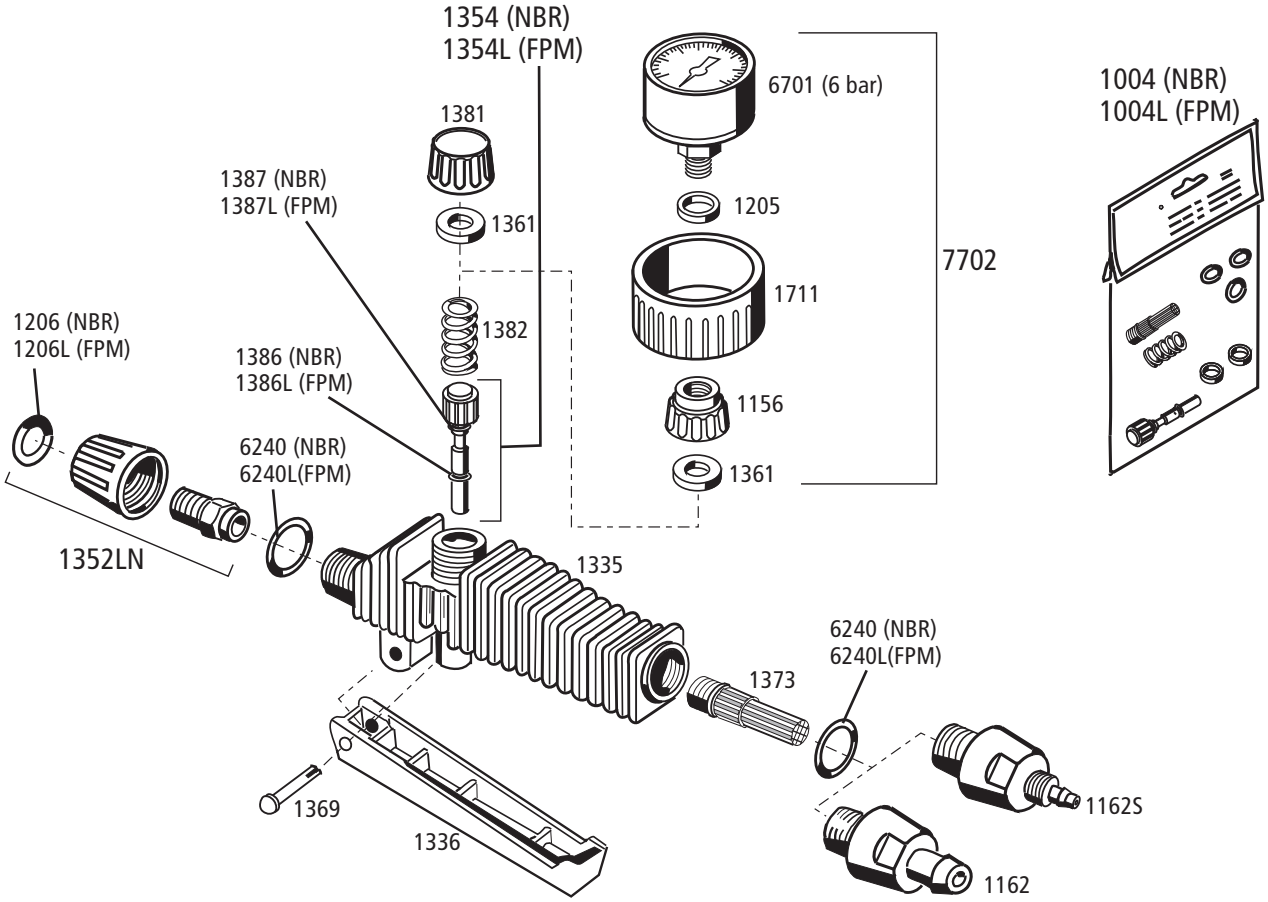
1344, 1344L, 1344G, 1348, 1348LN